- [illegible]

  [illegible] P37 1-8 [illegible] P40 1-8 [illegible]

  21:00 [illegible]

[illegible] [illegible] L [illegible] S [illegible] ρ [illegible] [illegible] n [illegible] m [illegible] e. [illegible] [illegible] v [illegible]

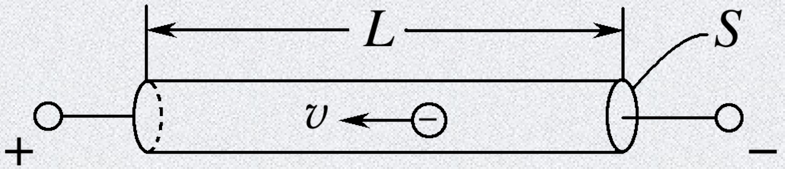

A. $\dfrac{mv^2}{2eL}$　　B. $\dfrac{mv^2Sn}{e}$　　√C. ρnev　　D. $\dfrac{\rho ev}{SL}$

[illegible] ([illegible]) [illegible] . [illegible]

[illegible] A [illegible] α [illegible] A [illegible] β [illegible] [illegible]

A. [illegible]

B. [illegible] A [illegible] $\tan\beta$

C. [illegible] A [illegible] U_0I_0

√

D. √ [illegible] A [illegible] $\frac{U_0}{I_0}$

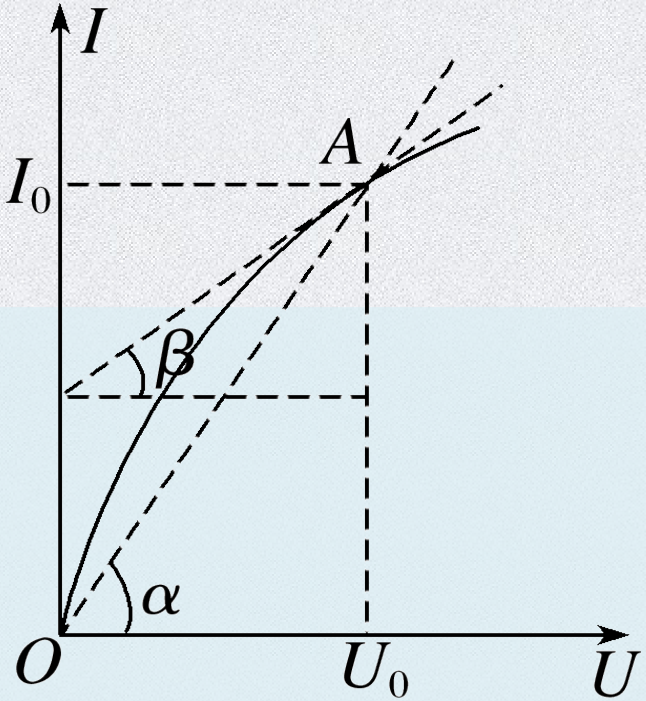

□□□□　□□□□□□□□□□□□□□

□□　□□□□□□□□□□□□□□□□□□□□□□□□M □□□□ R □□. □□□□□ S_1 □ S_2 □□□□□□□□□□□□□□□□□□□□□□□□□□□□□□□□□□□□□□. □□□□□□□□□□ 220 V □□□□□□□□□ 120 W □□□□□□□□ 1 000 W. □□□□□□□□□□□□□□

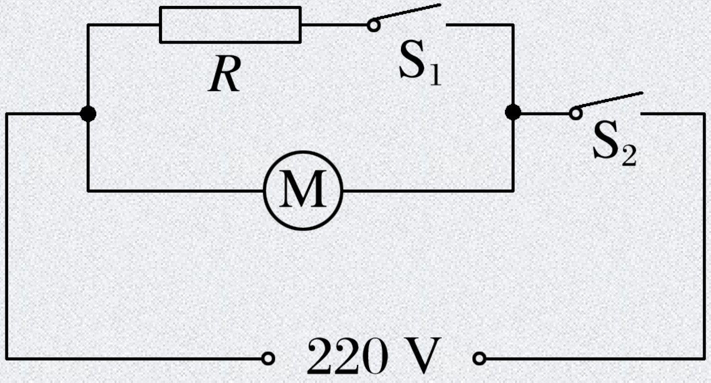

A. □□□□□□□ 55 Ω

B. □□□□□□□ $\frac{1210}{3}$ Ω

√ C. □□□□□□□□□□□□□□□□□□□ 120 J

D. □□□□□□□□□□□□□□□□□□□ 880 J

2.7

[illegible]

1. [illegible].

2. [illegible].

3. [illegible]

[illegible]

[illegible].

(1) [illegible]

[illegible] [illegible].

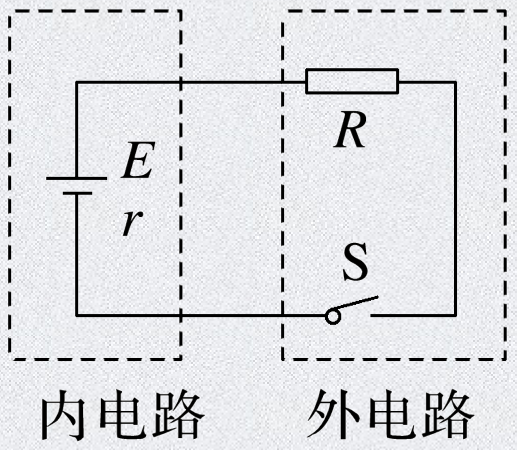

(2) [illegible] E [illegible] I [illegible] t [illegible]

[illegible]

[illegible] EIt I^2rt I^2Rt EIt [illegible] I^2Rt [illegible] I^2rt

(3) [illegible] I [illegible] E [illegible] R [illegible] r [illegible]

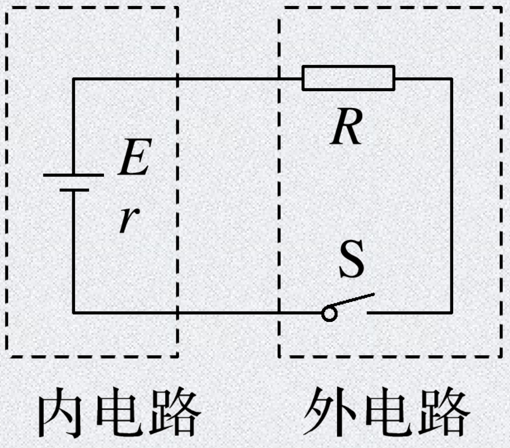

E [illegible] IR [illegible] Ir [illegible] I [illegible] $\frac{E}{R \text{[illegible]} r}$

[illegible]

U [illegible] E [illegible] Ir [illegible] E [illegible] U [illegible] U [illegible].

[illegible]

[illegible] ________ ([illegible]“[illegible]”[illegible]“[illegible]”[illegible]“[illegible]”) [illegible] . [illegible]

[illegible] [illegible] [illegible]
[illegible] .

□□□□□□□□□□□6 V□□□□1 Ω□R_1□5 Ω□R_2□10 Ω□□□□□□R_3□□□□□□□□0□10 Ω□□□□□□□□□□□□□.

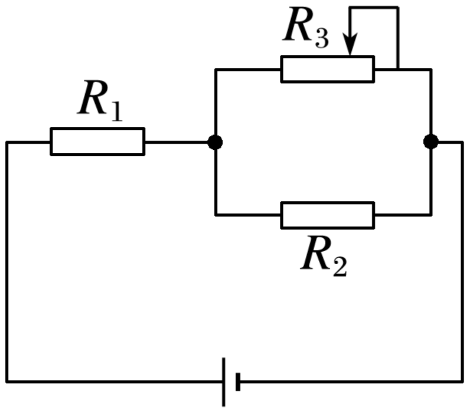

□　□R_3□□□□□□R_2□□□□□□□□□□□□□□□□□□□.

$R_{\square} \square R_1 \square 5\,\Omega \square I \square \frac{E}{R_{\square} \square r} \square \frac{6}{5 \square 1}$ A$\square$1 A.

□R_3□□□10 Ω□□□□□□□□□□□□□□□□□.

$R_{\square} \square \frac{R_3R_2}{R_3 \square R_2} \square 5\,\Omega \square R_{\square}' \square R_1 \square R_{\square} \square 10\,\Omega \square$

$I \square \frac{E}{R_{\square}' \square r} \square \frac{6}{10 \square 1}$ A≈0.55 A.

[illegible] S [illegible] a [illegible]“4 V [illegible] 8 W” [illegible] L [illegible] S [illegible] b [illegible] R [illegible] 1 A [illegible] R [illegible] 5 V. [illegible]

(1) [illegible] R [illegible]

(2) [illegible].

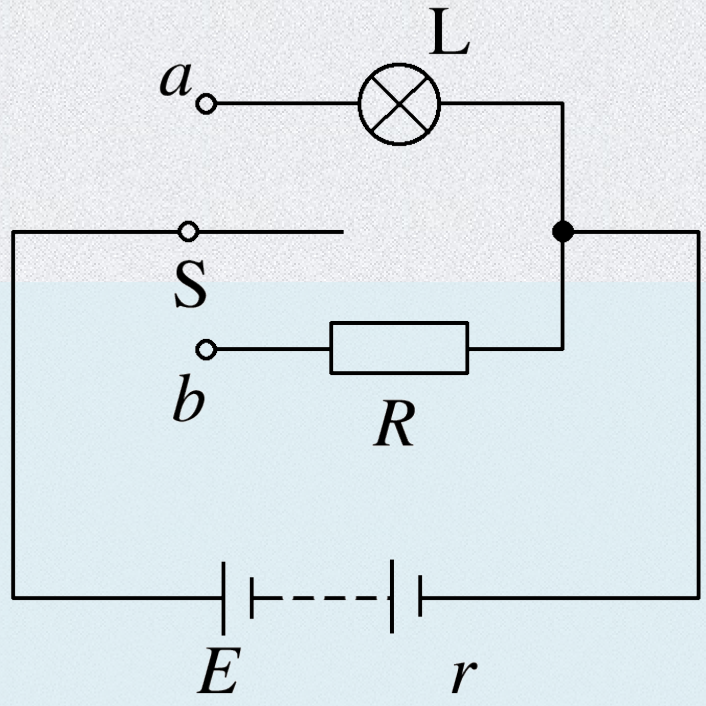

[illegible]

1. [illegible] E [illegible] 10 V [illegible] r [illegible] 1 Ω [illegible] R [illegible] 3 Ω [illegible] 4 Ω [illegible] 9 Ω [illegible]. [illegible]

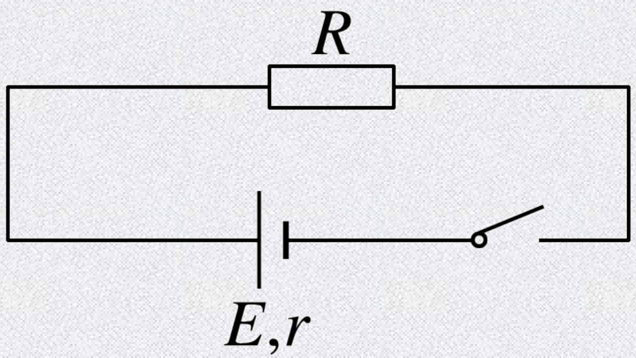

[illegible] [illegible] 7.5 V [illegible] 8 V [illegible] 9 V. [illegible]

[illegible].

1. □□□□□□□□□ U□ E□Ir .

2. □□□□□□□□□□□□□

(1) □□□□ R □□□□□□ I □□□□□□□ □□ .

(2) □□□□ R □□□□□□ I □□□□□□□ □□ .

(3) □□□□□□□□□□□□ $R\to\infty$ □ I□ 0 □ U□ E □□□□□□□□□□□□ .

□□□□□□□ R□0□ I□ $\frac{E}{r}$ □ U□ 0 □□□□□□□□□□□□□□□□□□□□□□□□□□□□ .

3. [illegible] U [illegible] I [illegible]

[illegible] U [illegible] E [illegible] Ir [illegible] U [illegible] I [illegible].

(1) [illegible] U [illegible] E [illegible]__________ [illegible].

(2) I [illegible] I_0 [illegible]__________ [illegible].

(3) [illegible]______ [illegible]____ [illegible] [illegible] . r $\left|\frac{\Delta U}{\Delta I}\right|$

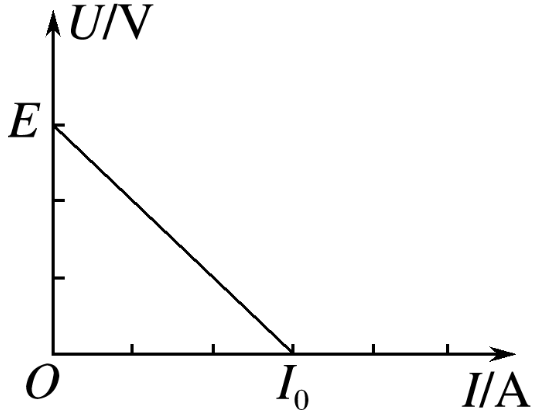

([illegible]) [illegible] A [illegible] B [illegible]

[illegible]

A. [illegible] E_A [illegible] E_B √

B. [illegible] r_A [illegible] r_B

C. [illegible] A [illegible] 0.2 A √

D. [illegible] B [illegible] 0.3 A

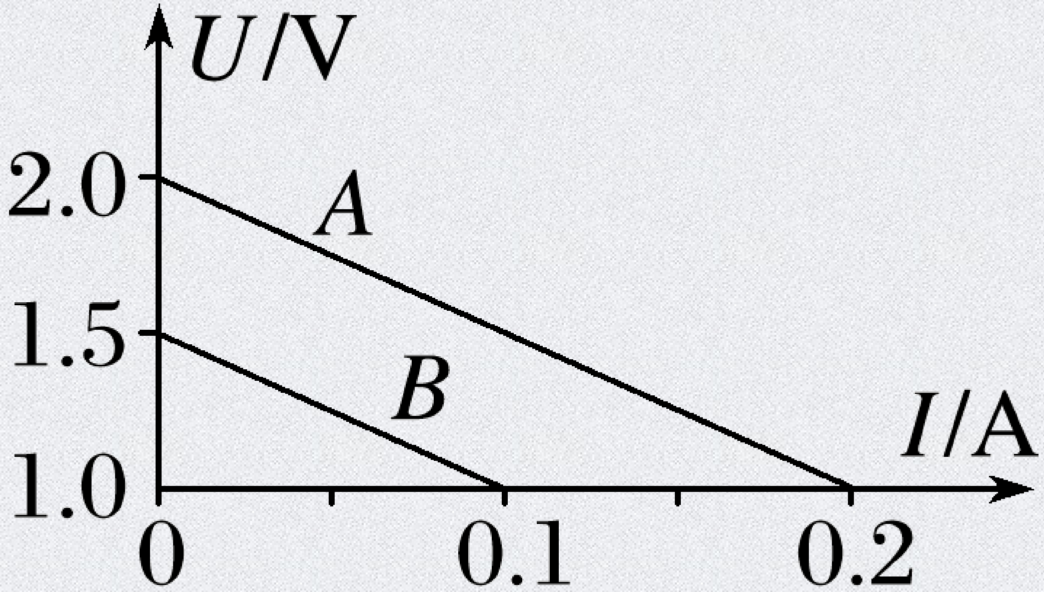

[illegible].